7.3 Volumes of Revolution: the Shell Method

Study 7.3 p. 472 # 1–9, 13, 15, 21, 27

7.3 Volumes of Revolution: the Shell Method

Consider: $y = x3 - 3x + 3,\ x = 0,\ y = 0,\ x = 2$

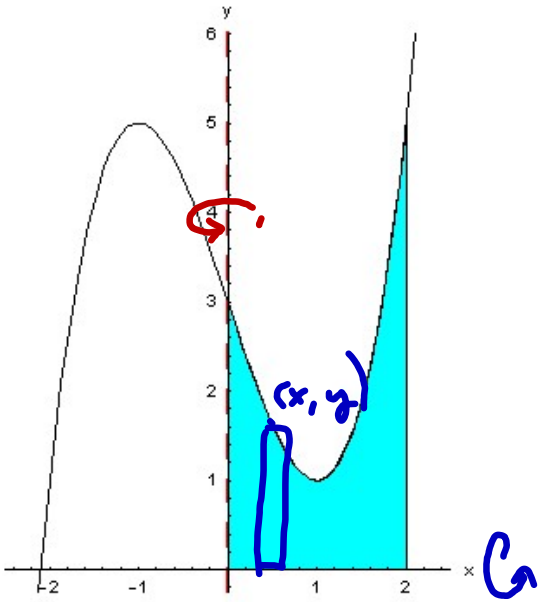

Easy to revolve about x-axis: Use disk method

BUT, what about revolving about y axis?

7.3 Volumes of Revolution: the Shell Method

Consider: $y = x3 - 3x + 3$, $x = 0$, $y = 0$, $x = 2$

What about revolving about y axis?

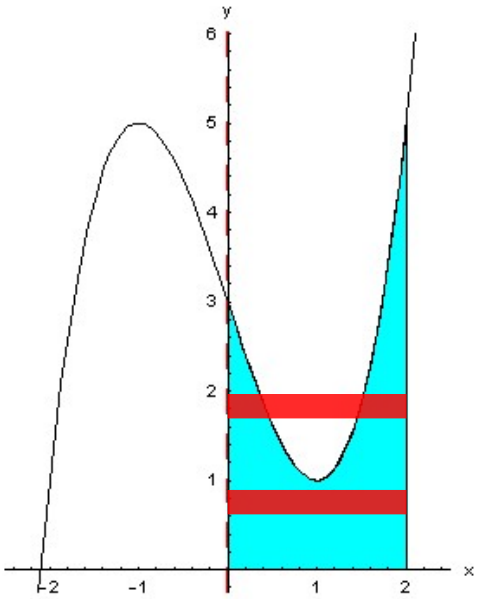

Reference rectangle for disk method is not consistent and does not have an easy algebraic representation.

7.3 Volumes of Revolution: the Shell Method

Consider: $y = x3 - 3x + 3$, $x = 0$, $y = 0$, $x = 2$

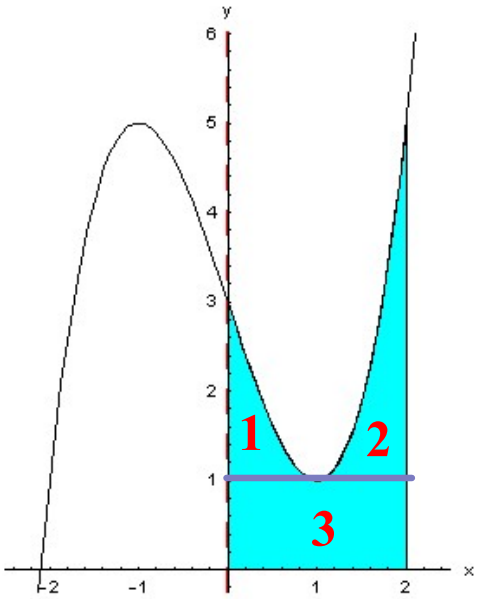

Could divide into 3 regions.
Then add the volumes.

7.3 Volumes of Revolution: the Shell Method

Consider: $y = x3 - 3x + 3$, $x = 0$, $y = 0$, $x = 2$

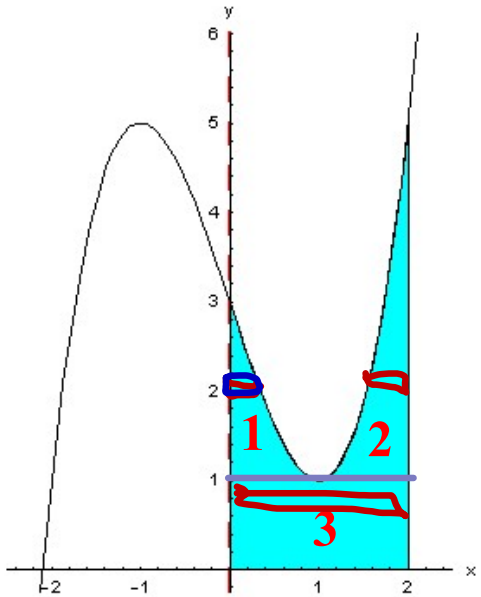

For Region 1:

$$V = \pi \int_c^d R^2 \, dy$$

$$R = x$$

We have x, but we need an integrand to match the dy.

Could divide into 3 regions.

7.3 Volumes of Revolution: the Shell Method

Consider: $y = x3 - 3x + 3$, $x = 0$, $y = 0$, $x = 2$

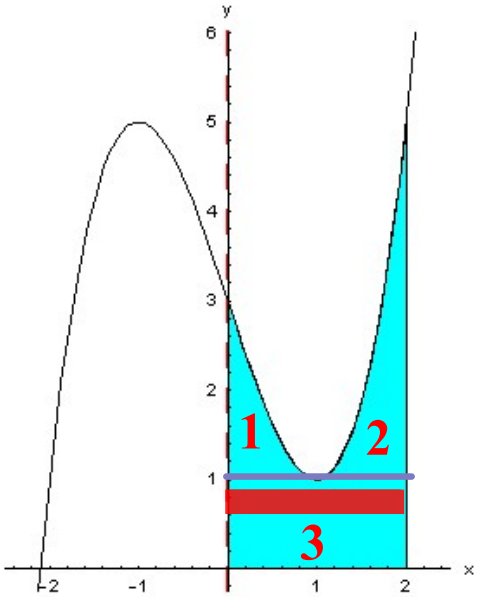

For dy, we need to solve the cubic function for x in terms of y to express the integrand algebraically

7.3 Volumes of Revolution: the Shell Method

Use alternate method: **the Shell Method** .

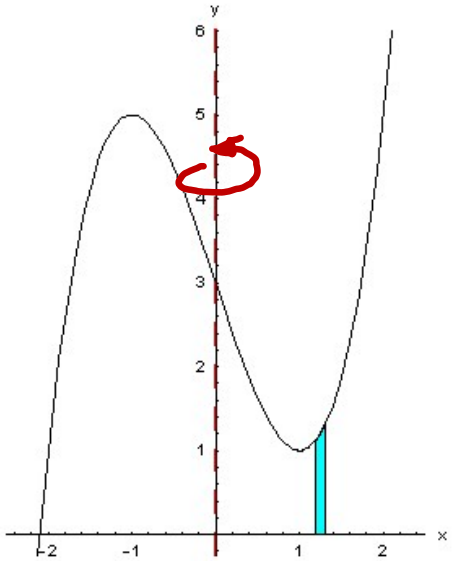

Start with reference rectangle, but this time the
Reference Rectangle is parallel to the axis of revolution.

7.3 Volumes of Revolution: the Shell Method

Use alternate method: **the Shell Method** .

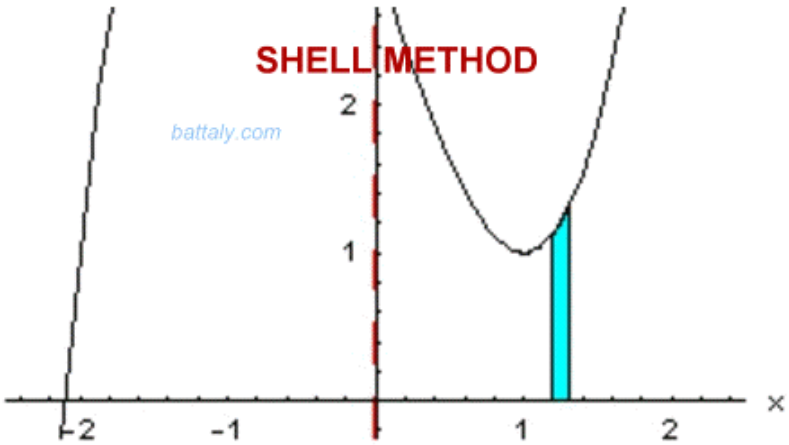

shell_method.swf

Start with reference rectangle, but this time the
Reference Rectangle is parallel to the axis of revolution.

7.3 Volumes of Revolution: the Shell Method

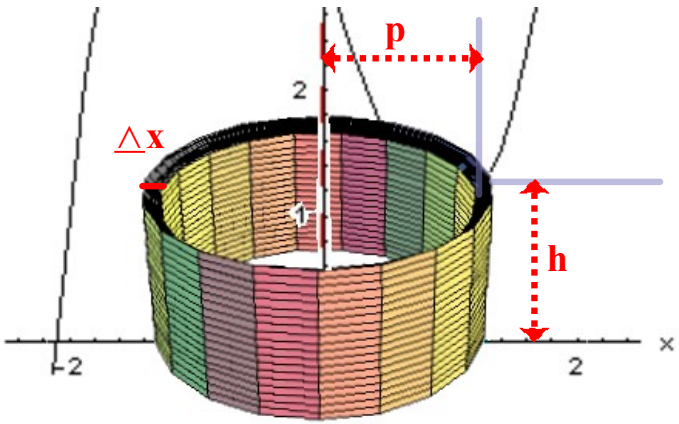

p = average radius of shell
h = height
dx or dy = thickness

$$V = 2\pi \int_a^b p(x)h(x)\,dx \quad \text{or} \quad V = 2\pi \int_c^d p(y)h(y)\,dy$$

$$V = 2\pi \int_a^b p(x)h(x)\,dx$$

7.3 Volumes of Revolution: the Shell Method

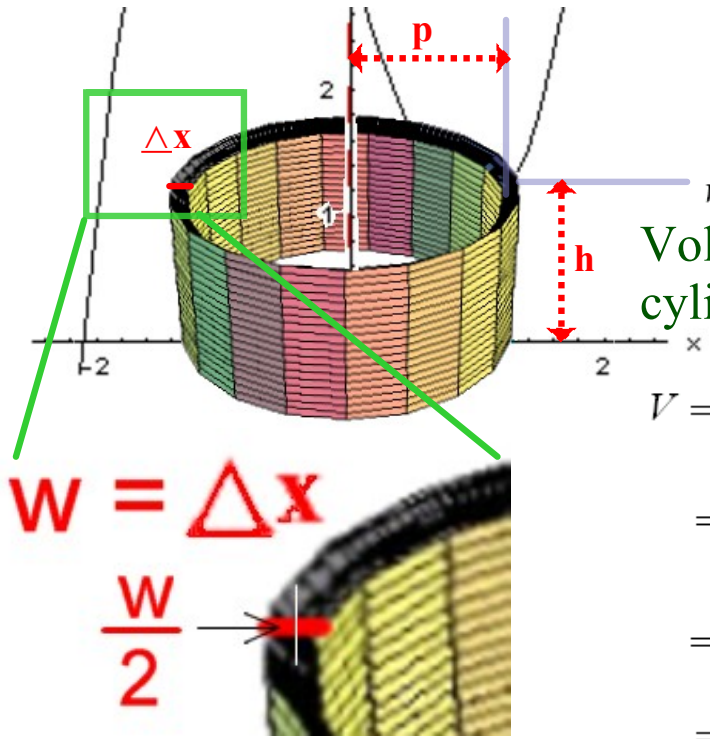

p = average radius of shell
h = height
dx or dy = thickness

$$V = 2\pi\int_a^b p(x)h(x)\,dx \quad \text{or} \quad V = 2\pi\int_c^d p(y)h(y)\,dy$$

Volume of the shell = volume of the outer cylinder - volume of the inner cylinder.

$$V = \pi(p+\frac{w}{2})^2 h - \pi(p-\frac{w}{2})^2 h$$

$$= \pi h\left[(p+\frac{w}{2})^2 - (p-\frac{w}{2})^2\right]$$

$$= \pi h\left[(p^2 + wp + \frac{w^2}{4}) - (p^2 - wp + \frac{w^2}{4})\right]$$

$$= \pi h(2wp) = 2\pi p h w$$

$$\boxed{V = 2\pi\int_a^b p(x)h(x)\,dx}$$

w (delta x) is the width of the reference shell. Add the volumes of adjacent shells, and let delta x -->0. Results in representation of the thickness of the shell as dx or dy.

7.3 When to Use the Shell Method

Volumes of Revolution - Which Method?

1. Sketch the curves and identify the region, using the points of intersection.

2. Locate the axis of revolution on the sketch.

3. Decide whether to use a horizontal or vertical rectangle. Select the orientation that requires the least number of separate sections.

4. Decide whether to use the Disc Method or the Shell Method:

a) If the rectange is **perpendicular** to the axis of revolution, use the **Disc Method**.

b) If the rectangle is **parallel** to the axis of revolution, use the **Shell Method**.

Volumes of Revolution - Shell Method

1. Complete Steps 1 to 4 in *Volumes of Revolution, which Method?* noted above.

2. Be sure that your rectangle is parallel to the axis of revolution.

3. Determine the variable of integration:

a) If the rectangle is horizontal, then integrate with respect to y (use *dy*). The integrand must be in terms of y.

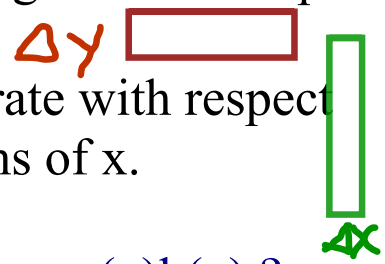

b) If the rectangle is vertical, then integrate with respect to x (use *dx*). The integrand must be in terms of x.

4. Determine the integrand: p(x)h(x) or p(y)h(y) ?

a) **If the rectangle is horizontal**, identify **p(y)**, the distance of the rectangle from the axis of revolution, and **h(y)**, the length of the rectangle. Use: $V = 2\pi \int_a^c p(y)h(y)dy$

b) **If the rectangle is vertical**, identify **p(x)**, the distance of the rectangle from the axis of revolution, and **h(x)**, the length of the rectangle. Use: $V = 2\pi \int_a^b p(x)h(x)dx$

7.3 Volumes of Revolution: the Shell Method

Consider: $y = x3 - 3x + 3$, $x = 0$, $y = 0$, $x = 2$

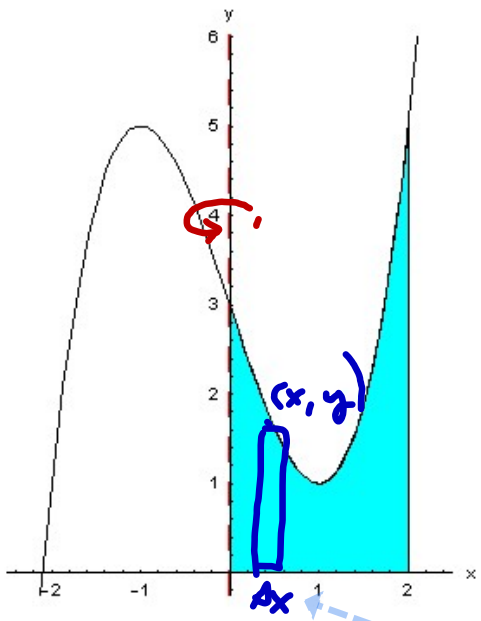

Which formula?

* $V = 2\pi \int_a^b p(x)h(x)\,dx$

$V = 2\pi \int_c^d \underline{p(y)}\,h(y)\,dy$

* Use the formula with dx!

Which method?

Shell Method.
Can't find x= f(y).

7.3 Volumes of Revolution: the Shell Method

$$* \Rightarrow V = 2\pi \int_a^b p(x)\,h(x)\,dx$$

$$V = 2\pi \int_0^2 x\,y\,dx$$

$$= 2\pi \int_0^2 x(x^3 - 3x + 3)\,dx$$

$$= 2\pi \int_0^2 (x^4 - 3x^2 + 3x)\,dx$$

$$= 2\pi \left[\frac{x^5}{5} - \frac{\cancel{3}x^3}{\cancel{3}} + \frac{3x^2}{2} \right]_0^2$$

$$= 2\pi \left[\left(\frac{32}{5} - 8 + \frac{3}{\cancel{2}} \cdot \cancel{4}^{\,2} \right) - 0 \right]$$

$$= 2\pi \left[\frac{32}{5} \cancel{- 8 + 6}^{\,-2} \right] = 2\pi \left[\frac{\cancel{32 - 10}^{\,22}}{5} \right] = \frac{44\pi}{5}$$

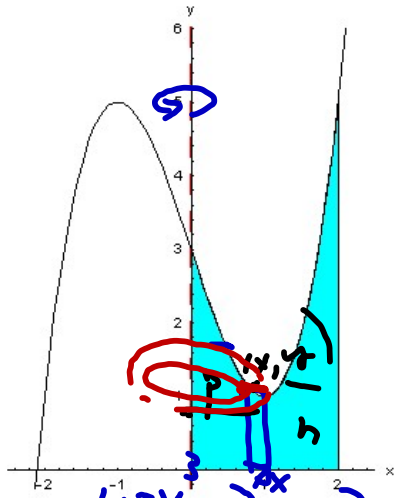

$y = x^3 - 3x + 3$

h = height of rect.

p = distance fr. rect. to axis of revolution.

27.646

7.3 Volumes of Revolution: the Shell Method

use SM.

#22. G: $y=x^2$, $y=4x-x^2$ F: Vol. @ $x=2$

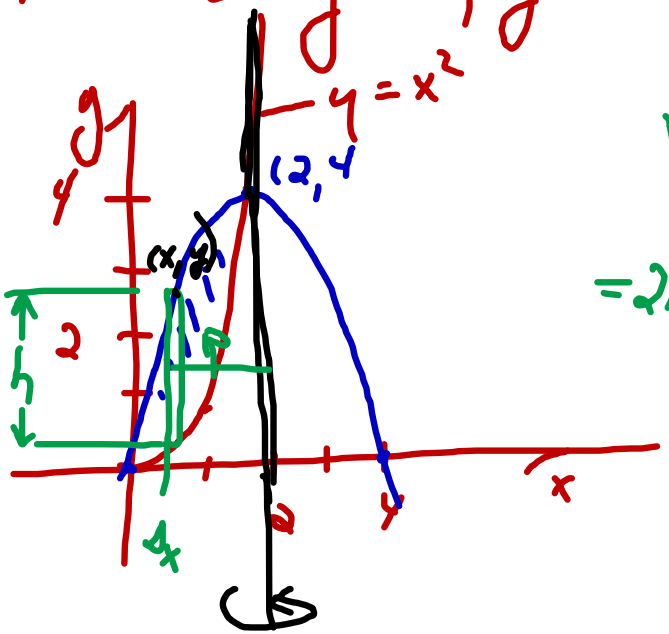

$$V = 2\pi \int_a^b p(x)\, h(x)\, dx$$

$$= 2\pi \int_0^2 (2-x)(4x-2x^2)\, dx$$

$p = 2-x$

$h = y_u - y_L = 4x - x^2 - x^2 = 4x - 2x^2$

7.3 Volumes of Revolution: the Shell Method